EE-434 Power Electronics

Engr. Dr. Hadeed Ahmed Sher

Ghulam Ishaq Khan Institute of Engineering Sciences and Technology
Topi 23460, Pakistan

hadeed@giki.edu.pk

June 6, 2020

Overview

1. Full wave rectifier
   - UCFWR— The Topologies
   - UCFWR— The Topologies
2. Full wave rectifier
   - UCFW— Resistive load
   - UCFW— RL load
   - UCFW— Capacitance output filter
     - Capacitance output filter— The input current
   - Voltage doublers
   - UCFW — LC filtered output
   - Example 4-5

UCFWR— The bridge topology

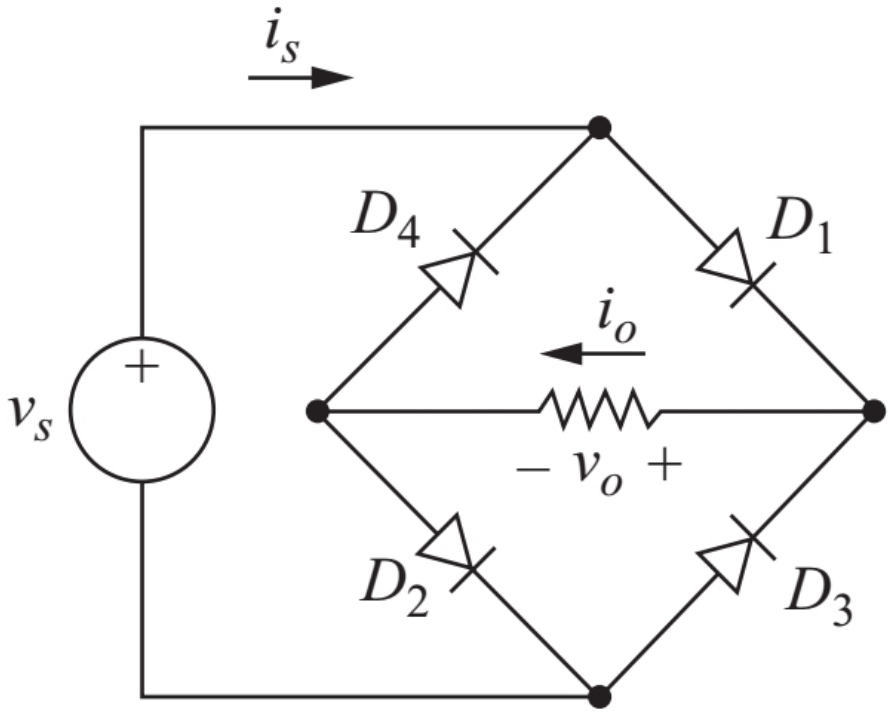

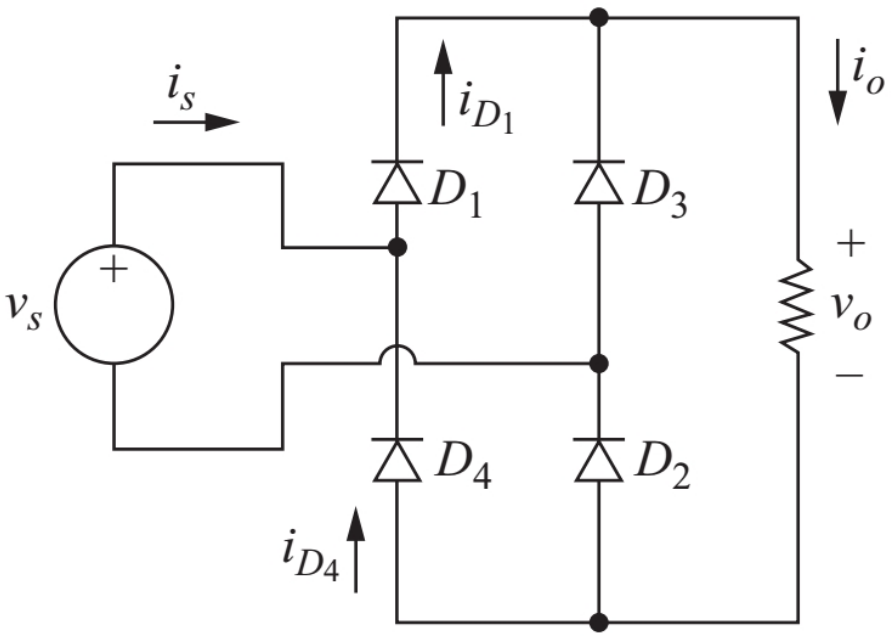

UCFWR— The Center Tapped Topology

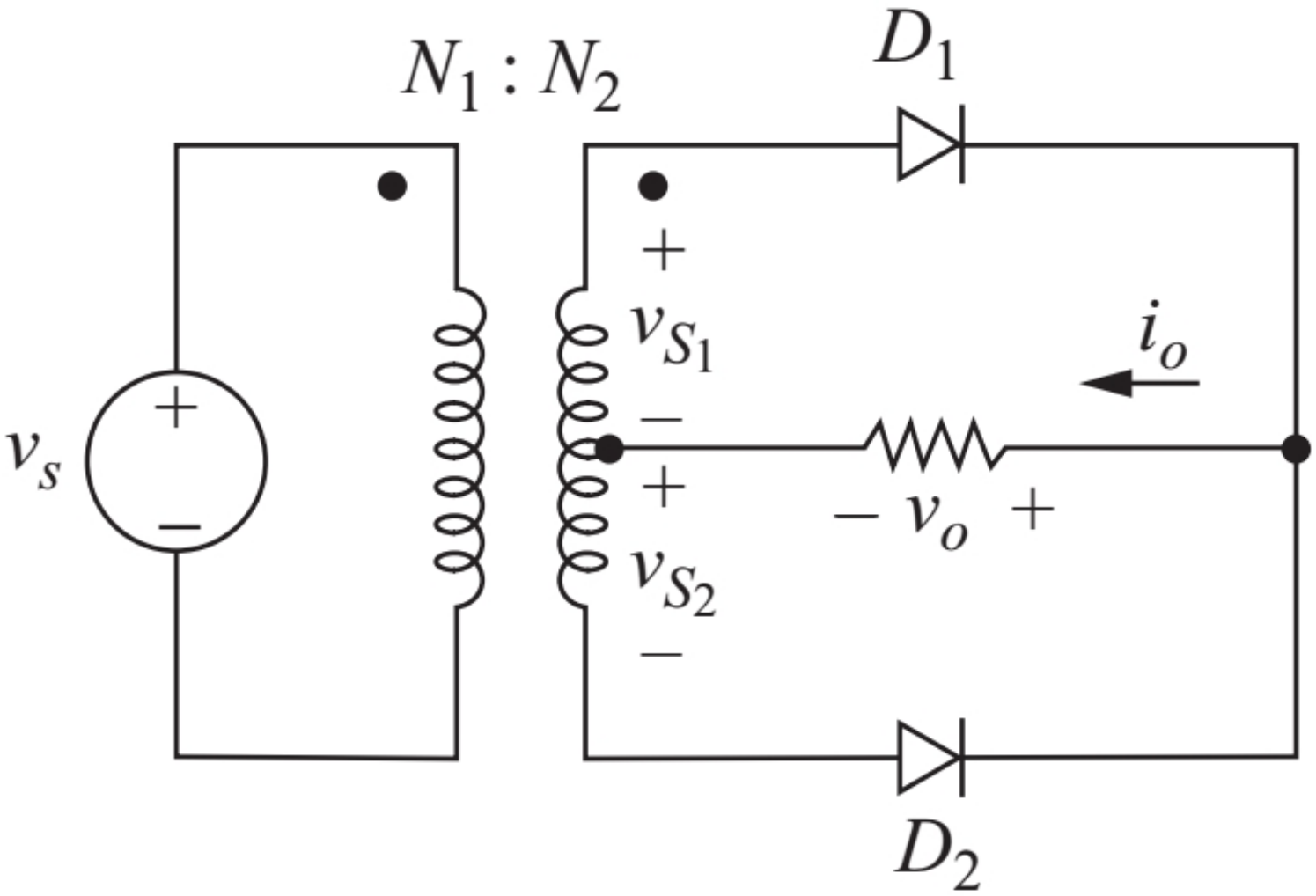

Resistive load

Circuit below shows a full wave bridge rectifier with a capacitive output filter.

$$v_o(\omega t) = \begin{cases} V_m \sin \omega t & \text{for } 0 \leq \omega t \leq \pi \\ -V_m \sin \omega t & \text{for } \pi \leq \omega t \leq 2\pi \end{cases}$$

$$V_o = \frac{1}{\pi}\int_0^{\pi} V_m \sin \omega t \, d(\omega t) = \frac{2V_m}{\pi}$$

$$I_o = \frac{V_o}{R} = \frac{2V_m}{\pi R}$$

RL load

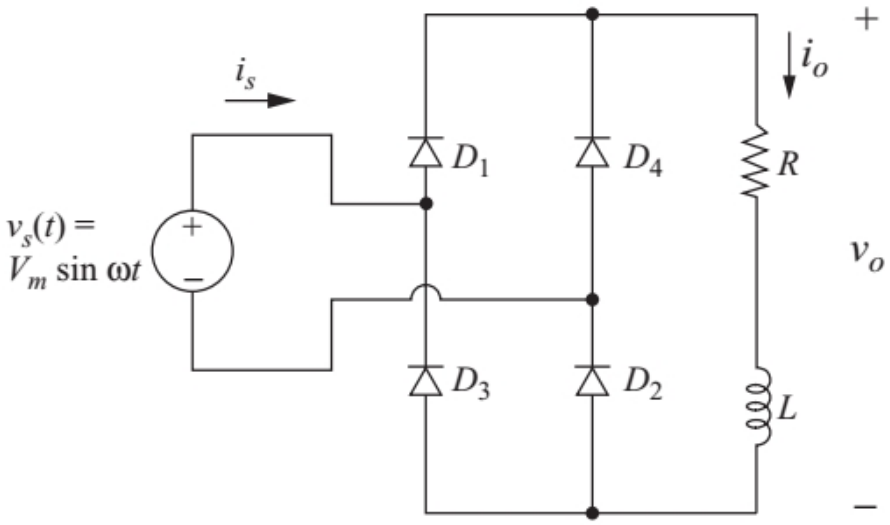

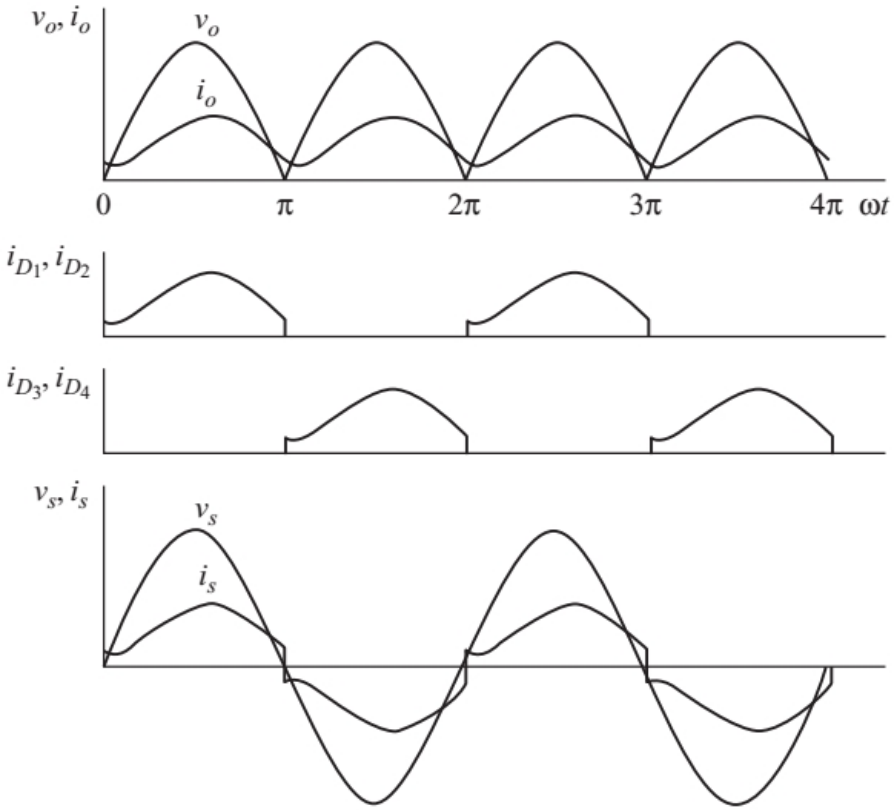

$$v_o(t) = V_o + \sum_{n=2,4\ldots}^{\infty} V_n \cos(n\omega_0 t + \pi)$$

$$V_o = \frac{2V_m}{\pi} \quad \text{and} \quad V_n = \frac{2V_m}{\pi}\left(\frac{1}{n-1} - \frac{1}{n+1}\right)$$

$$I_0 = \frac{V_0}{R}$$

$$I_n = \frac{V_n}{Z_n} = \frac{V_n}{|R + jn\omega L|}$$

If Inductance is very large

For RL load, if the inductance is very large then the current will nearly be constant.

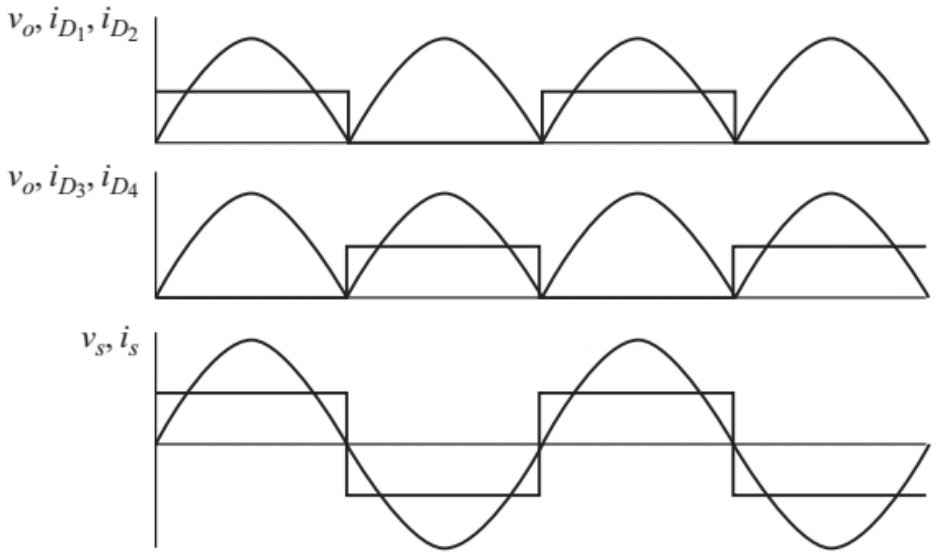

Capacitance output filter

Circuit below shows a full wave bridge rectifier with a capacitive output filter.

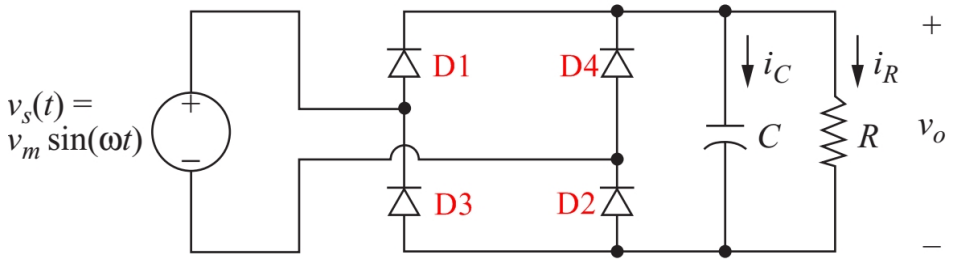

When D_1 and D_2 conducts, D_3 and D_4 are reverse biased. Each pair works for one half cycle so the output is a unipolar sinusoidal shape with no zero intervals. Hence it is called a full wave rectifier. The use of single quadrant device shows that the power can only flow from ac-dc. The point of interest for this kind of rectifier circuit is the shape of the supply current ,output current, load current and load voltage

UCFW— Capacitance output filter

Compared to a half wave rectifier, here, the output voltage ripple is one-half. Note that the output is a pesudo dc link if the capacitor is not present.
Because there are two diodes in this circuit that operate simultaneously, therefore the peak output voltage is less than a half-wave rectifier.
When the diodes are on,

$$v_o(\omega t) = |V_m sin\omega t| \tag{1}$$

When diodes are off

$$v_o(\omega t) = (V_m sin\theta)e^{-(\omega t-\theta)/\omega RC} \tag{2}$$

where,

$$\theta = tan^{-1}(-\omega RC) = -tan^{-1}(\omega RC) + \pi \tag{3}$$

UCFW— Capacitance output filter

The maximum output voltage is V_m and the minimum output voltage is determined by evaluating v_o at the angle at which the second pair of diode turns on i.e., at $\omega t = \pi + \alpha$. At this boundary

$$(V_m sin\theta)e^{-(\pi+\alpha-\theta)/\omega RC} = -V_m sin(\pi + \alpha) \tag{4}$$

or

$$(sin\theta)e^{-(\pi+\alpha-\theta)/\omega RC} - sin\alpha \tag{5}$$

The peak to peak voltage variation, or ripple, is the difference between maximum and minimum voltage

$$\Delta V_o = V_m - |V_m sin(\pi + \alpha)| = V_m(1 - sin\alpha) \tag{6}$$

In practical circuits, $\omega RC >> \pi$.

$$\theta = \alpha =\approx \frac{\pi}{2} \tag{7}$$

The minimum output voltage is at π.

$$v_o(\pi + \alpha) = V_m e^{-(\pi+\pi/2-\pi/2)/\omega RC} = V_m e^{-\pi/\omega RC} \tag{8}$$

UCFW— Capacitance output filter

The ripple voltage is then approximated as

$$\Delta V_o \approx V_m(1 - e^{-\pi/\omega RC}) \tag{9}$$

The exponential term can be approximated as

$$e^{-\pi/\omega RC} \approx 1 - \frac{\pi}{\omega RC} \tag{10}$$

Therefore, the peak to peak ripple is

$$\Delta V_o \approx \frac{V_m \pi}{\omega RC} = \frac{V_m}{2fRC} \tag{11}$$

The input current

Now, let us analyze the input current of the circuit.
The input current flows only when the input voltage exceeds the output voltage.
As a result the current is of different shape then the voltage and therefore, such circuits are major cause of power pollution.

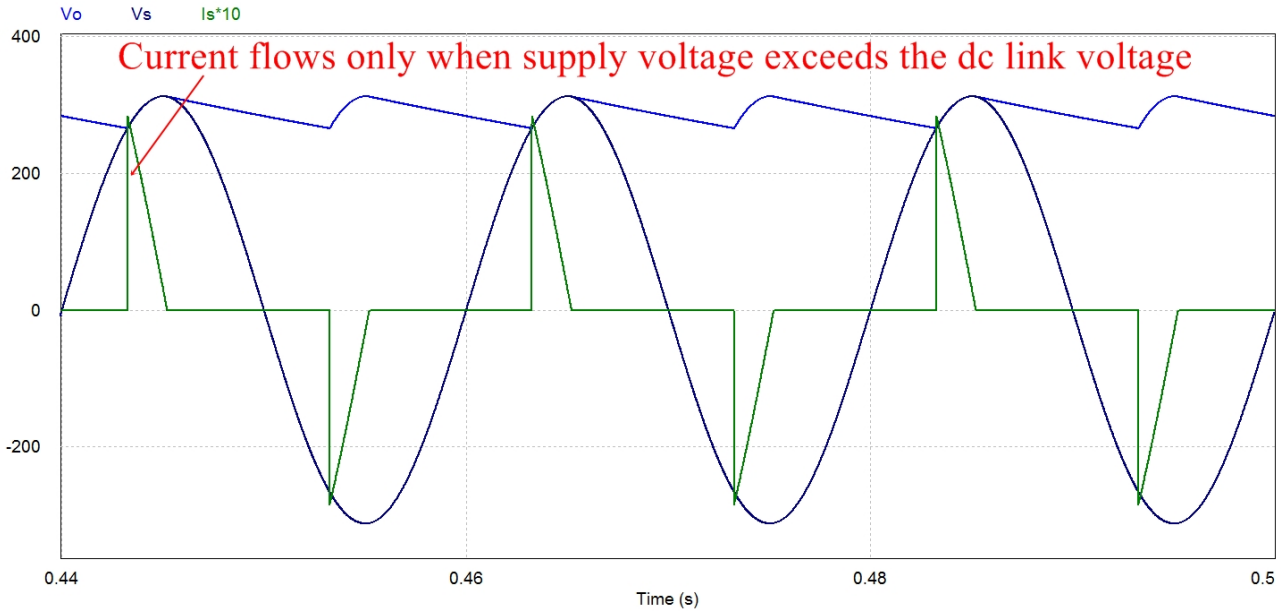

Simulation results of input current

Figure shows the effect of source inductance on current shape. This current shape has odd harmonic.

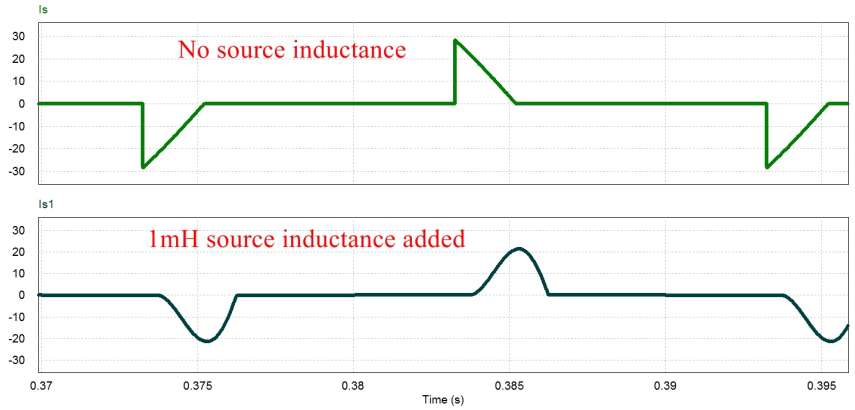

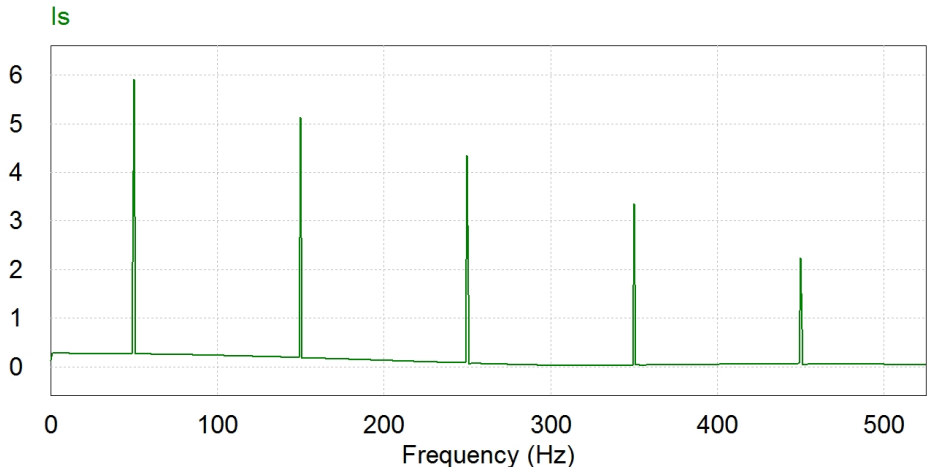

Simulation of input current

During the first half cycle, the capacitor is not charged and therefore, it act a a short circuit. This short circuit path creates a high inrush current spike as shown below.

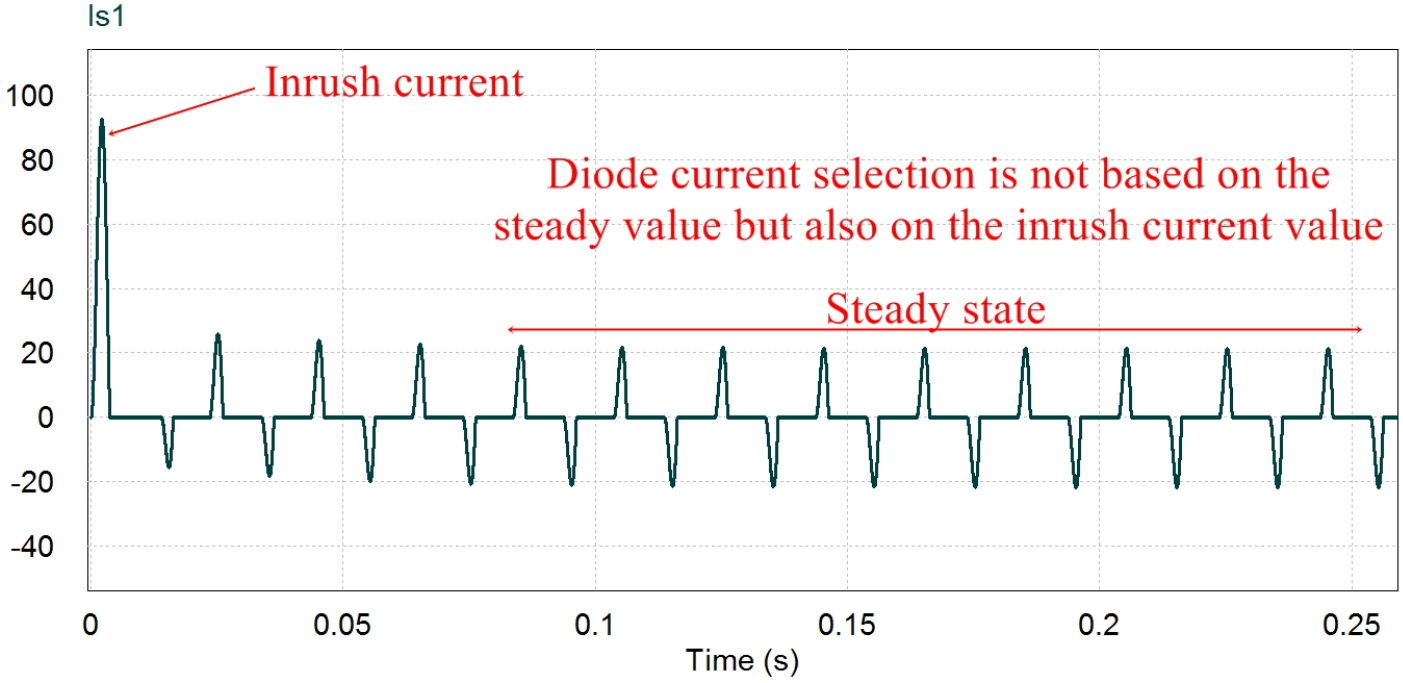

If the system is connected at the peak of the ac supply, the magnitude of inrush current increases. Therefore, inrush current limiting mechanisms are desired.

Techniques to suppress inrush current

There are various methods to decrease the inrush current magnitude.

- Series resistance
- Series thermistor
- Relay based series resistance
- Switch in series with the load

Suppressing inrush current — Method 1

The use of a small series resistance reduces the amplitude of inrush current.

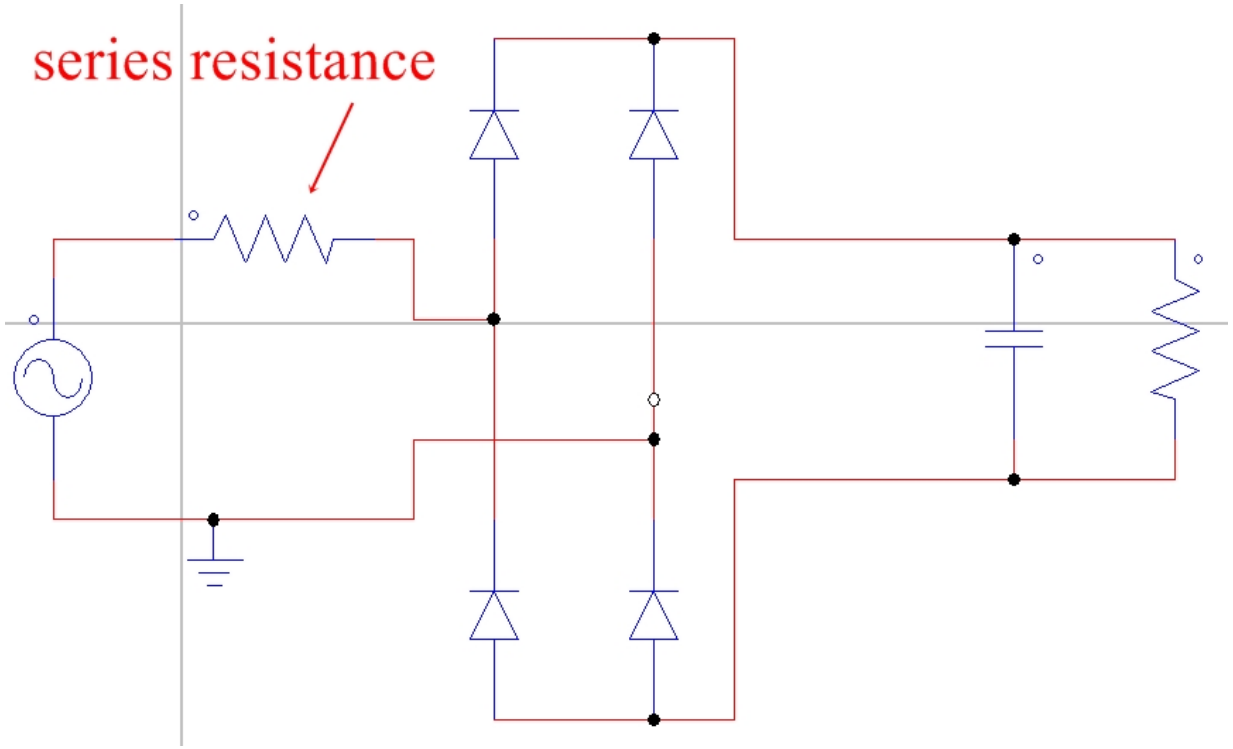

This method generates continuous losses in the system and is therefore, not recommended.

Suppressing inrush current — Method 2

The use of a thermistor (temperature dependent resistor) also reduces the inrush current. However, the thermistor must have a negative temperature coefficient.

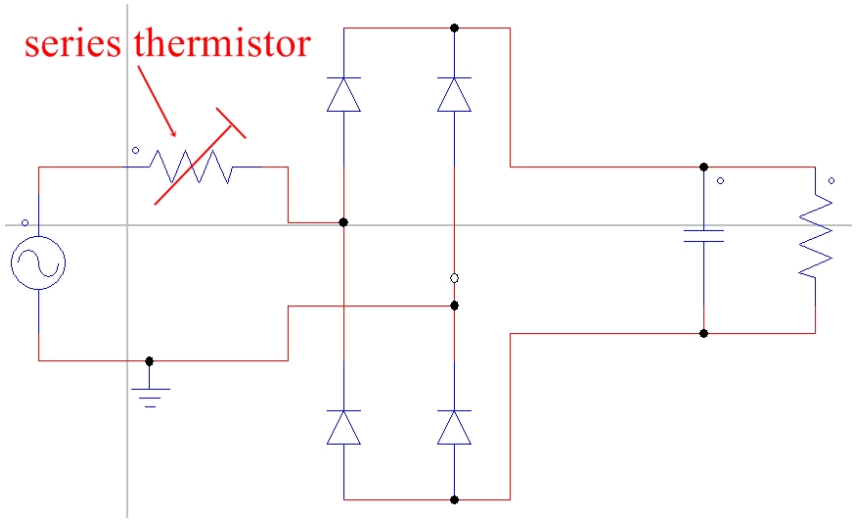

This method is widely used in commercial products. During the start, the termistor is cold and hence offer some resistance. As the current flows the thermistor gets hot and its resistance decreases. This method is not good in case of frequent light tripping

Suppressing inrush current — Method 2

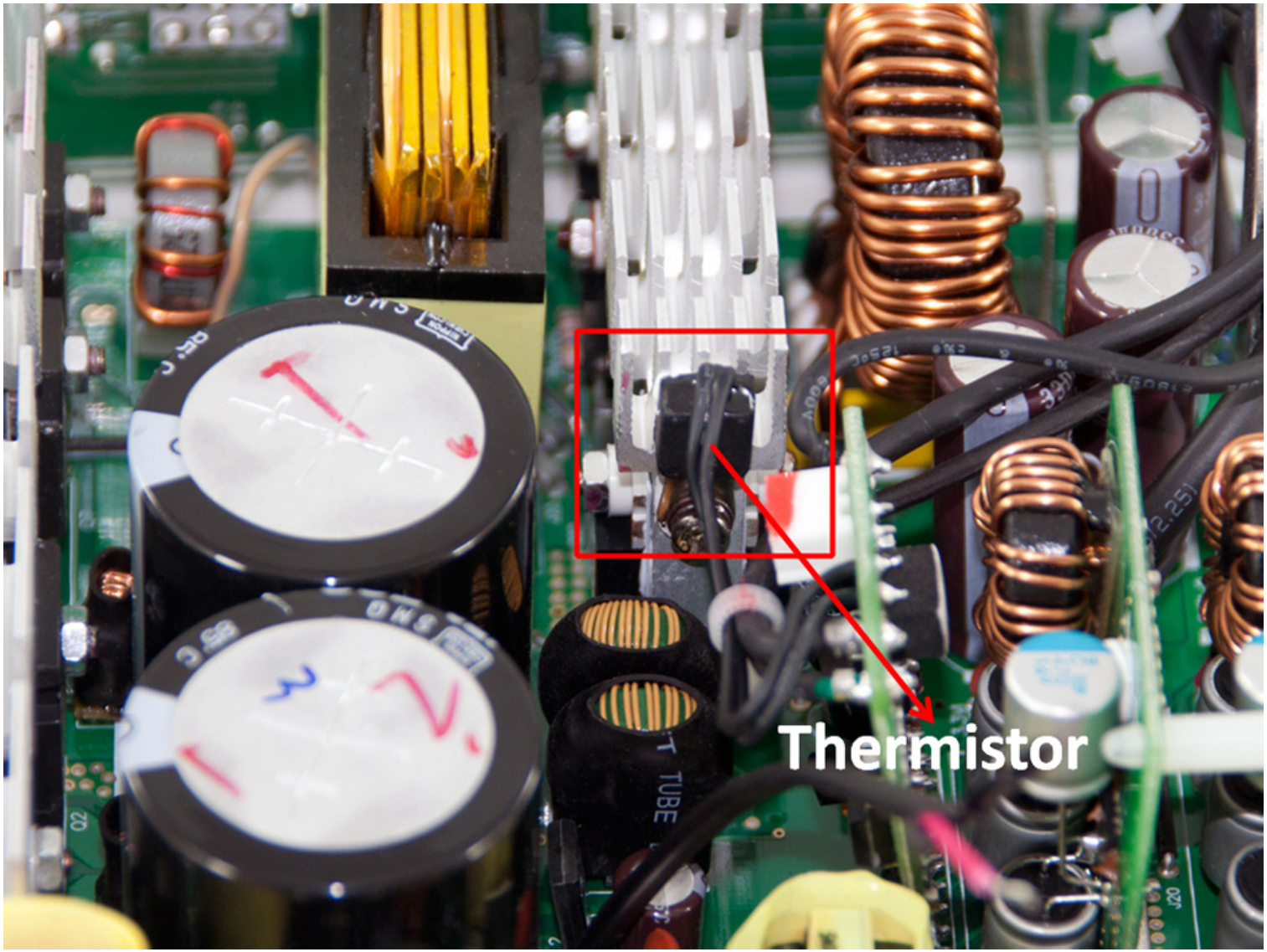

Ref : https://bit.ly/304oD5u

Voltage doublers

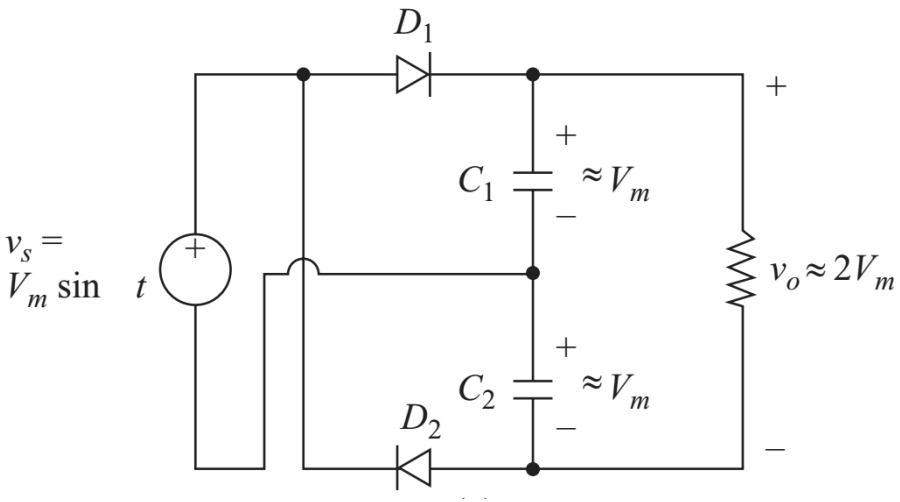

C_1 charges to V_m through D_1 when source is positive. C_2 charges to V_m through D_2 when source is positive. Load voltage is twice the input voltage($2V_m$).

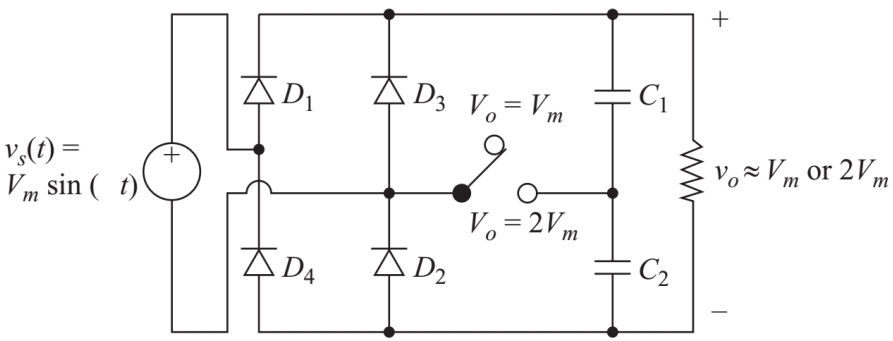

When the switch is open, the circuit is similar to a full wave rectifier. When the switch is closed, circuit acts as a voltage doubler.
C_1 charges to V_m through D_1 when source is positive. C_2 charges to V_m through D_4 when source is positive. Diodes D_2 and D_3 remain reverse biased in this mode.

UCFW — LC filtered output

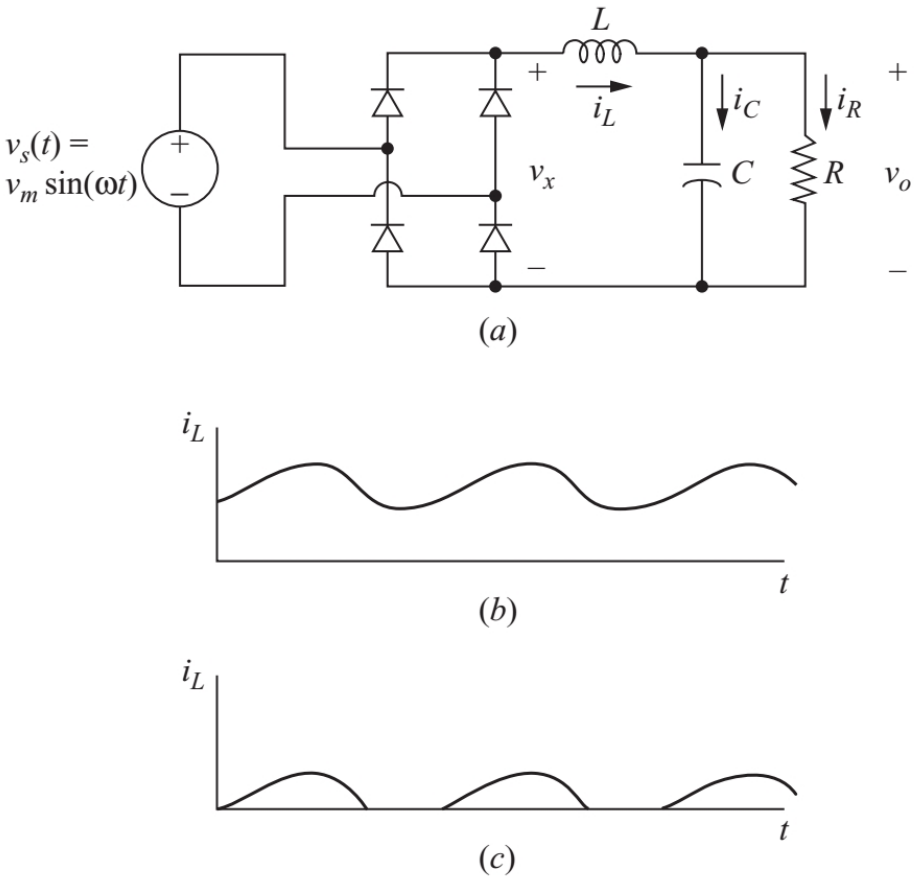

Using an LC filter has two advantages. First, the capacitor smooths out the voltage and inductor smooth the current, thus reducing the peak current from the diode.

Circuit can operate in CCM or DCM mode.

LC filtered output — Continuous current

For continuous current, the voltage v_x is a full- wave rectified sine wave with an average value of $2V_m/\pi$.
Since the average voltage across inductor is zero in steady state, the average output voltage for continuous inductor current is

$$V_o = \frac{2V_m}{\pi} \tag{12}$$

Average inductor current must equal to the average resistor current because the average capacitor current is zero.

$$I_L = I_R = \frac{V_o}{R} = \frac{2V_m}{\pi R} \tag{13}$$

LC filtered output — Continuous current

The variation in inductor current can be estimated using Fourier series. The full wave rectified sinusoidal voltage across the load can be expressed as

$$v_o(t) = \frac{2V_m}{\pi} + \sum_{n=2,4\ldots}^{\infty} \left(\frac{2V_m}{\pi} \left(\frac{1}{n-1} - \frac{1}{n+1} \right) \right) cos(n\omega_o t + \pi) \quad (14)$$

The first ac term is obtained with n=2. The amplitude of inductor current for n=2 is

$$I_2 = \frac{V_2}{Z_2} \approx \frac{V_2}{2\omega L} = \frac{4V_m/3\pi}{2\omega L} = \frac{2V_m}{3\pi\omega L} \quad (15)$$

For a positive current, the amplitude of ac term must be less than the dc term. Using above equations and solving for L

$$I_2 < I_L \implies \frac{2V_m}{3\pi\omega L} < \frac{2V_m}{\pi R} \implies L > \frac{R}{3\omega} \quad (16)$$

LC filtered output — Continuous current

For continuous current

$$\frac{3\omega L}{R} > 1 \tag{17}$$

If the above condition is true then the output voltage is $\frac{2V_m}{\pi}$.
If not the output is determined from analysis for DCM.

LC filtered output — Discontinuous current

For DCC the current becomes positive only when the bridge output voltage reaches the level of capacitor voltage. Let that particular point along ωt axis be α.

$$\alpha = sin^{-1}\left(\frac{V_o}{V_m}\right) \tag{18}$$

While the current is positive, inductor voltage is calculated using KVL as

$$v_L = V_{s(t)} - V_o = V_m sin(\omega t) - V_o \tag{19}$$

where the output voltage V_o is unknown. Inductor current is expressed as

$$i_L(\omega t) = \frac{1}{\omega L}\int_{\alpha}^{\omega t}[V_m sin(\omega t) - V_o]d(\omega t) = \tag{20}$$

$$i_L(\omega t) = \frac{1}{\omega L}[V_m(cos\alpha - cos\omega t)] - V_o(\omega t - \alpha) = 0 \tag{21}$$

valid for $\alpha \leq \omega t \leq \beta$ when $\beta < \pi$

LC filtered output — Discontinuous current

The solution for load voltage V_o is based on the fact that the average inductor current must equal the current in load resistor. An iterative method is presented below.
1. Estimate a value of V_o slightly below V_m and solve (18) for α.
2. Solve for $\omega t = \beta$ in (21) for inductor current. 3. Solve for average inductor current I_L.

$$i_L = \frac{1}{\pi}\int_{\alpha}^{\beta}\frac{1}{\omega L}\left[V_m(cos\alpha - cos\omega t) - V_o(\omega t - \alpha)\right]d(\omega t) \qquad (22)$$

4. Solve for load voltage V_o based on average inductor current as

$$V_o = I_l R \qquad (23)$$

5. Repeat the steps until the computed value of V_o in setp 4 equals the estimated value in step 1.

Example 4-5

A full-wave rectifier has a source of $v_s(t)$=100 sin(377t) V. An LC filter is used, with L=5 mH and C=10,000μF. The load resistance is (a) 5Ω and (b) 50Ω. Determine the output voltage for each case.

Solution:

Using (17), continuous inductor current exists when $R < 3\omega L$=3(377)(0.005)=5.7Ω. This means that for 5Ω the current is continuous and for 50Ω the current is discontinuous. For R=5Ω, the output voltage is determined using (12) as $V_o = \frac{2V_m}{\pi} = 63.7V$

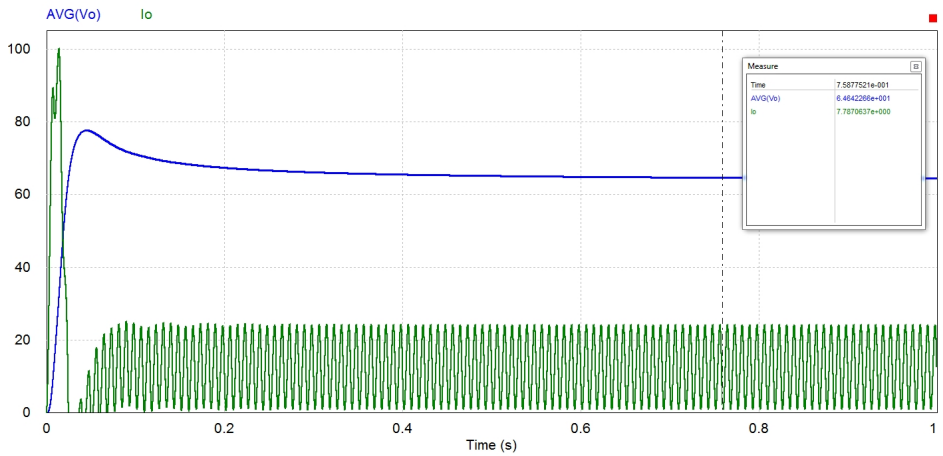

Full-Wave Rectifier with LC Filter

For R=50Ω, the output current is discontinuous and the procedure outlined in (25) is used.
Let the output voltage be V_o=90V. The calculated values are shown below.
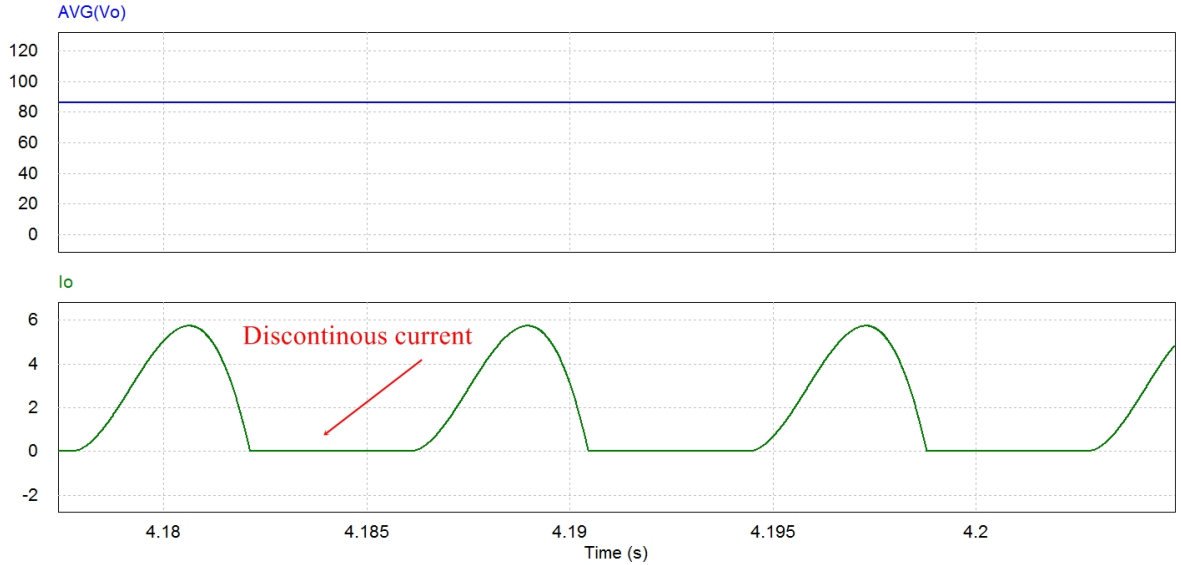
Estimated V_o	α	β	Calculated V_o	
90	1.12	2.48	38.8	(Estimate is too high)
80	0.93	2.89	159	(Estimate is too low)
85	1.12	2.70	88.2	(Estimate is slightly low)
86	1.04	2.66	76.6	(Estimate is too high)
85.3	1.02	2.69	84.6	(Approximate solution)